STANDARD SPECIFICATIONS
for
HIGHWAY BRIDGES

SIXTEENTH EDITION
1996

Adopted and Published by the
American Association of State Highway
and Transportation Officials, Inc.

444 North Capitol Street, N.W., Suite 249
Washington, D.C. 20001

© Copyright 1996 by the American Association of State Highway and Transportation Officials, Inc. All Rights Reserved. Printed in the United States of America. This book, or parts thereof, may not be reproduced in any form without permission of the publishers.

ISBN 1-56051-040-4

3.3.5 Where the abrasion of concrete is not expected, the traffic may bear directly on the concrete slab. If considered desirable, ¼ inch or more may be added to the slab for a wearing surface.

3.3.6 The following weights are to be used in computing the dead load:

	#/cu.ft.
Steel or cast steel	490
Cast iron	450
Aluminum alloys	175
Timber (treated or untreated)	50
Concrete, plain or reinforced	150
Compacted sand, earth, gravel, or ballast	120
Loose sand, earth, and gravel	100
Macadam or gravel, rolled	140
Cinder filling	60
Pavement, other than wood block	150
Railway rails, guardrails, and fastenings (per linear foot of track)	200
Stone masonry	170
Asphalt plank, 1 in. thick	9 lb. sq. ft.

3.4 LIVE LOAD

The live load shall consist of the weight of the applied moving load of vehicles, cars, and pedestrians.

3.5 OVERLOAD PROVISIONS

3.5.1 For all loadings less than H 20, provision shall be made for an infrequent heavy load by applying Loading Combination IA (see Article 3.22), with the live load assumed to be H or HS truck and to occupy a single lane without concurrent loading in any other lane. The overload shall apply to all parts of the structure affected, except the roadway deck, or roadway deck plates and stiffening ribs in the case of orthotropic bridge superstructures.

3.5.2 Structures may be analyzed for an overload that is selected by the operating agency in accordance with Loading Combination Group IB in Article 3.22.

3.6 TRAFFIC LANES

3.6.1 The lane loading or standard truck shall be assumed to occupy a width of 10 feet.

3.6.2 These loads shall be placed in 12-foot wide design traffic lanes, spaced across the entire bridge roadway width measured between curbs.

3.6.3 Fractional parts of design lanes shall not be used, but roadway widths from 20 to 24 feet shall have two design lanes each equal to one-half the roadway width.

3.6.4 The traffic lanes shall be placed in such numbers and positions on the roadway, and the loads shall be placed in such positions within their individual traffic lanes, so as to produce the maximum stress in the member under consideration.

3.7 HIGHWAY LOADS

3.7.1 Standard Truck and Lane Loads*

3.7.1.1 The highway live loadings on the roadways of bridges or incidental structures shall consist of standard trucks or lane loads that are equivalent to truck trains. Two systems of loading are provided, the H loadings and the HS loadings—the HS loadings being heavier than the corresponding H loadings.

3.7.1.2 Each lane load shall consist of a uniform load per linear foot of traffic lane combined with a single concentrated load (or two concentrated loads in the case of continuous spans—see Article 3.11.3), so placed on the span as to produce maximum stress. The concentrated load and uniform load shall be considered as uniformly distributed over a 10-foot width on a line normal to the center line of the lane.

3.7.1.3 For the computation of moments and shears, different concentrated loads shall be used as indicated in Figure 3.7.6B. The lighter concentrated loads shall be used when the stresses are primarily bending stresses, and the heavier concentrated loads shall be used when the stresses are primarily shearing stresses.

*Note: The system of lane loads defined here (and illustrated in Figure 3.7.6.B) was developed in order to give a simpler method of calculating moments and shears than that based on wheel loads of the truck.

Appendix B shows the truck train loadings of the 1935 Specifications of AASHO and the corresponding lane loadings.

In 1944, the HS series of trucks was developed. These approximate the effect of the corresponding 1935 truck preceded and followed by a train of trucks weighing three-fourths as much as the basic truck.

3.7.2 Classes of Loading

There are four standard classes of highway loading: H 20, H 15, HS 20, and HS 15. Loading H 15 is 75 percent of loading H 20. Loading HS 15 is 75 percent of Loading HS 20. If loadings other than those designated are desired, they shall be obtained by proportionately changing the weights shown for both the standard truck and the corresponding lane loads.

3.7.3 Designation of Loadings

The policy of affixing the year to loadings to identify them was instituted with the publication of the 1944 Edition in the following manner:

H 15 Loading, 1944 Edition shall be designated	*H 15-44*
H 20 Loading, 1944 Edition shall be designated	H 20-44
H 15-S 12 Loading, 1944 Edition shall be designated	HS 15-44
H 20-S 16 Loading, 1944 Edition shall be designated	HS 20-44

The affix shall remain unchanged until such time as the loading specification is revised. The same policy for identification shall be applied, for future reference, to loadings previously adopted by the American Association of State Highway and Transportation Officials.

3.7.4 Minimum Loading

Bridges supporting Interstate highways or other highways which carry, or which may carry, heavy truck traffic, shall be designed for HS20-44 Loading or an Alternate Military Loading of two axles four feet apart with each axle weighing 24,000 pounds, whichever produces the greatest stress.

3.7.5 H Loading

The H loadings consist of a two-axle truck or the corresponding lane loading as illustrated in Figures 3.7.6A and 3.7.6B. The H loadings are designated H followed by a number indicating the gross weight in tons of the standard truck.

3.7.6 HS Loading

The HS loadings consist of a tractor truck with semitrailer or the corresponding lane load as illustrated in Figures 3.7.7A and 3.7.6B. The HS loadings are designated by the letters HS followed by a number indicating the gross weight in tons of the tractor truck. The variable axle spacing has been introduced in order that the spacing of axles may approximate more closely the tractor trailers now in use. The variable spacing also provides a more satisfactory loading for continuous spans, in that heavy axle loads may be so placed on adjoining spans as to produce maximum negative moments.

3.8 IMPACT

3.8.1 Application

Highway Live Loads shall be increased for those structural elements in Group A, below, to allow for dynamic, vibratory and impact effects. Impact allowances shall not be applied to items in Group B. It is intended that impact be included as part of the loads transferred from superstructure to substructure, but shall not be included in loads transferred to footings nor to those parts of piles or columns that are below ground.

3.8.1.1 *Group A*—Impact shall be included.

(1) Superstructure, including legs of rigid frames.
(2) Piers, (with or without bearings regardless of type) *excluding footings and those portions below the* ground line.
(3) The portions above the ground line of concrete or steel piles that support the superstructure.

3.8.1.2 Group B—Impact shall not be included.

(1) Abutments, retaining walls, piles except as specified in 3.8.1.1 (3).
(2) Foundation pressures and footings.
(3) Timber structures.
(4) Sidewalk loads.
(5) Culverts and structures having 3 feet or more cover.

3.8.2. Impact Formula

3.8.2.1 The amount of the impact allowance or increment is expressed as a fraction of the live load stress, *and shall be determined by the formula:*

$$I = \frac{50}{L + 125} \qquad (3\text{-}1)$$

in which,

I = impact fraction (maximum 30 percent);

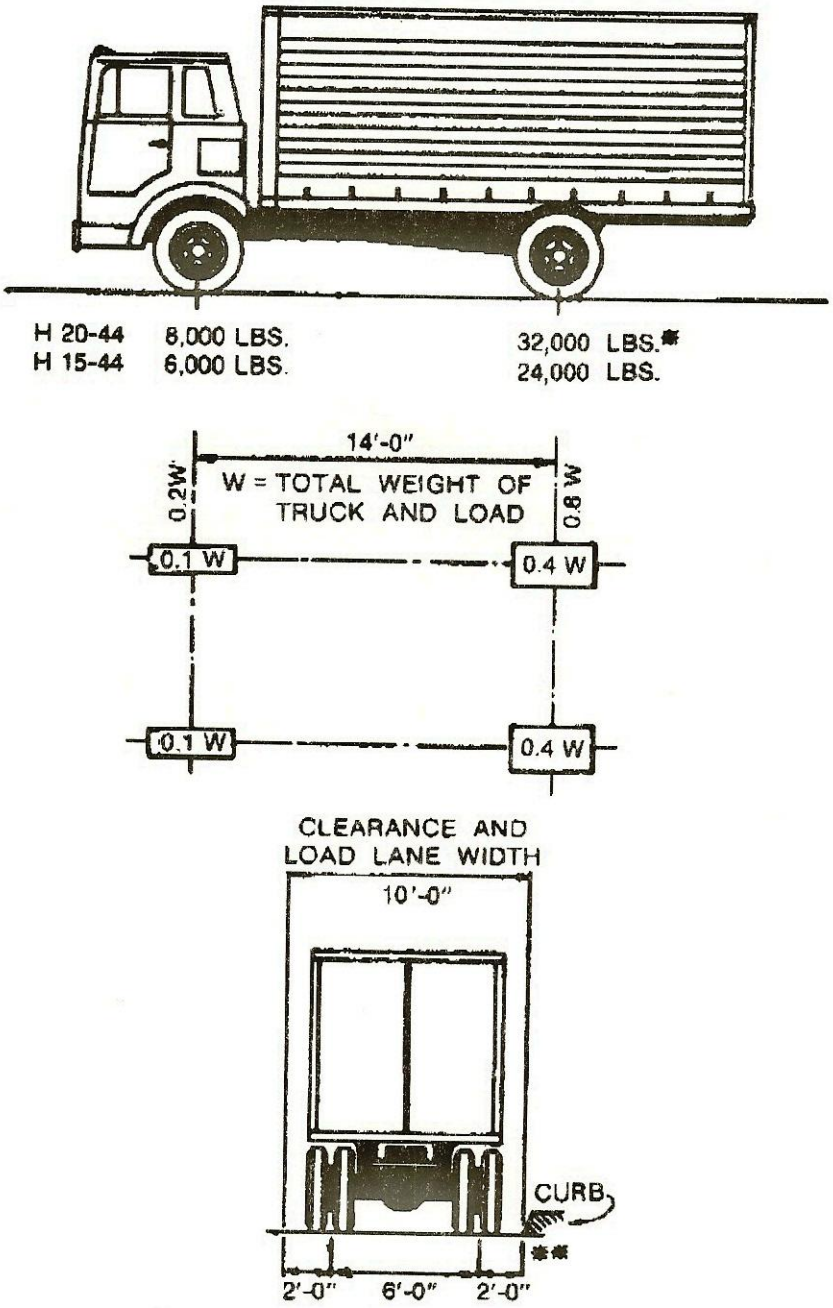

FIGURE 3.7.6A Standard H Trucks

*In the design of timber floors and orthotropic steel decks (excluding transverse beams) for H 20 loading, one axle load of 24,000 pounds or two axle loads of 16,000 pounds each spaced 4 feet apart may be used, whichever produces the greater stress, instead of the 32,000-pound axle shown.

**For slab design, the center line of wheels shall be assumed to be 1 foot from face of curb. (See Article 3.24.2.)

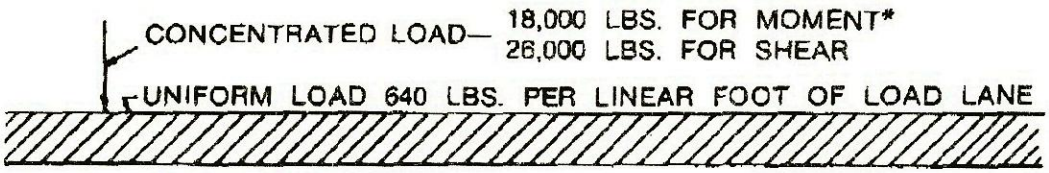

H20-44 LOADING
HS20-44 LOADING

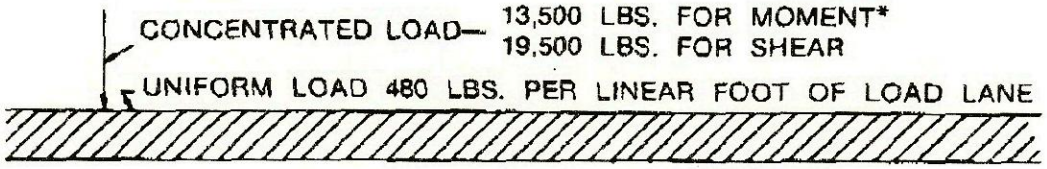

H15-44 LOADING
HS15-44 LOADING

FIGURE 3.7.6B. Lane Loading

*For the loading of continuous spans involving lane loading refer to Article 3.11.3 which provides for an additional concentrated load.

L = length in feet of the portion of the span that is loaded to produce the maximum stress in the member.

3.8.2.2 For uniformity of application, in this formula, the loaded length, L, shall be as follows:

(a) For roadway floors: the design span length.
(b) For transverse members, such as floor beams: the span length of member center to center of supports.
(c) For computing truck load moments: the span length, or for cantilever arms the length from the moment center to the farthermost axle.
(d) For shear due to truck loads: the length of the loaded portion of span from the point under consideration to the far reaction; except, for cantilever arms, use a 30 percent impact factor.
(e) For continuous spans: the length of span under consideration for positive moment, and the average of two adjacent loaded spans for negative moment.

3.8.2.3 For culverts with cover

0′0″ to 1′-0″ inc. I = 30%
1′-1″ to 2′-0″ inc. I = 20%
2′-1″ to 2′-11″ inc. I = 10%

3.9 LONGITUDINAL FORCES

Provision shall be made for the effect of a longitudinal force of 5 percent of the live load in all lanes carrying traffic headed in the same direction. All lanes shall be loaded for bridges likely to become one directional in the future. The load used, without impact, shall be the lane load plus the concentrated load for moment specified in Article 3.7, with reduction for multiple-loaded lanes as specified in Article 3.12. The center of gravity of the longitudinal force shall be assumed to be located 6 feet above the floor slab and to be transmitted to the substructure through the superstructure.

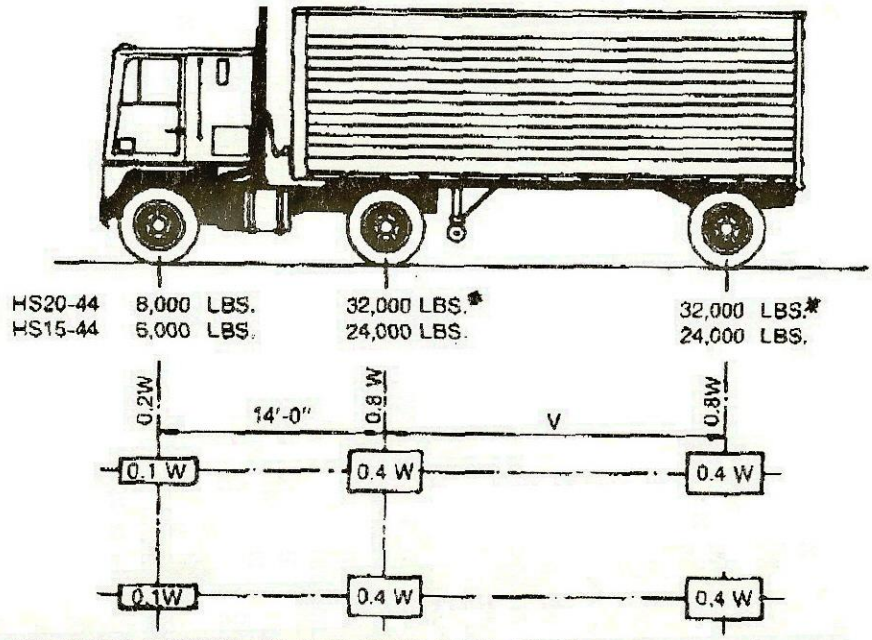

W = COMBINED WEIGHT ON THE FIRST TWO AXLES WHICH IS THE SAME AS FOR THE CORRESPONDING H TRUCK.

V = VARIABLE SPACING — 14 FEET TO 30 FEET INCLUSIVE. SPACING TO BE USED IS THAT WHICH PRODUCES MAXIMUM STRESSES.

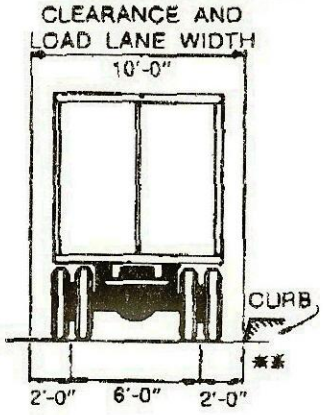

FIGURE 3.7.7A. Standard HS Trucks

*In the design of timber floors and orthotropic steel decks (excluding transverse beams) for H 20 loading, one axle load of 24,000 pounds or two axle loads of 16,000 pounds each, spaced 4 feet apart may be used, whichever produces the greater stress, instead of the 32,000-pound axle shown.

**For slab design, the center line of wheels shall be assumed to be 1 foot from face of curb. (See Article 3.24.2.)